CUSTOM POWER DESIGN

ELECTRONICS CONSULTANTS PROVIDING CUSTOM DESIGN, DEVELOPMENT, TEST & SUPPORT

Tel: + 44 (0)118 930 2299 *A DIVISION OF SMET LTD* *Fax: +44 (0)118 930 2206*

www.custompsudesign.com Unit 19, The Markham Centre, Station Road, Theale, Berks. RG7 4PE. custom@custompsudesign.com

INFORMATION SHEET AND USER GUIDE FOR

ACCESS POINT AP110 NETWORK POWER KIT

Model SM3895: 220/230V AC 50/60 Hz. Model SM3896: 110/115V AC 50/60 Hz.

GENERAL: The Intermec Access Point AP110 is supplied with a small AC power adapter which supplies low voltage DC to the Access Point. An AC power outlet is therefore needed close to every Access Point. Safe AC outlets can be costly and difficult to install in the required locations especially in industrial environments.

The Access Point connects to the network via a Hub which is always powered from a local AC supply. The network connection uses FCC RJ45 style 8 pin connectors and cable. Only four wires in the 8 wire standard network cable are used for data, leaving four wires spare. These can be used to take DC power to Access Points from special adapters plugged into the same mains outlet as the Hub. Note the mains adapter delivered with the Access Point is not used.

KIT DESCRIPTION: The network power system kit (1 per Access Point) consists of two parts**: -**

i) The Master unit (SM3895/6M) is a mains power unit connected between the normal network connection to the Hub and the network cable, allowing connection of low voltage (35V) DC to the four spare network wires arranged as two pairs. FCC RJ45 type inlet and outlet sockets are provided as well as a 2 metre long mains cord for connection to an AC outlet. Size is 110mm x 70mm x 64mm.

ii) The Slave unit (SM3895/6S) is a cable adapter with a 15V switching regulator inside. The Slave is connected between the long network cable and the normal network connection to the Access Point. It has FCC RJ45 sockets for the network cable to plug into, and for connection to the Access Point. There is also a 2.5mm +15V power jack on a flying lead which plugs into the power input socket on the Access point. Size is 70mm x 45mm x 28mm.

CABLING: In addition to the AC supply to the Master, three direct data cables are required**: -**

1) A short cable from the hub or host to socket PT1 on the Master unit (SM3895M). A standard direct patch cable is suitable. WARNING: Do not plug the hub into socket PT2 even for a second, as the hub may be damaged.

2) A network cable between socket PT2 on the Master and socket PT2 on the Slave. All 8 wires must be connected. Note that pins (wires) 4, 5, 7 and 8 carry the DC power from Master to Slave.

3) A short cable between socket PT1 on the Slave unit (SM3895S) and the Access Point. A standard direct patch cable is suitable.

Each cable should have an RJ45 plug each end. Pin 1 is connected to pin 1, pin 2 to pin 2, pin 3 to pin 3 etc. Pins 1 and 2 should use a twisted pair, as should pins 3 and 6. Typical standard connection is**: -**

Pin 1 orange/white	Pin 5 blue/white
Pin 2 orange	Pin 6 green
Pin 3 green/white	Pin 7 brown/white
Pin 4 blue	Pin 8 brown.

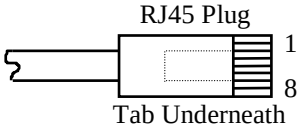

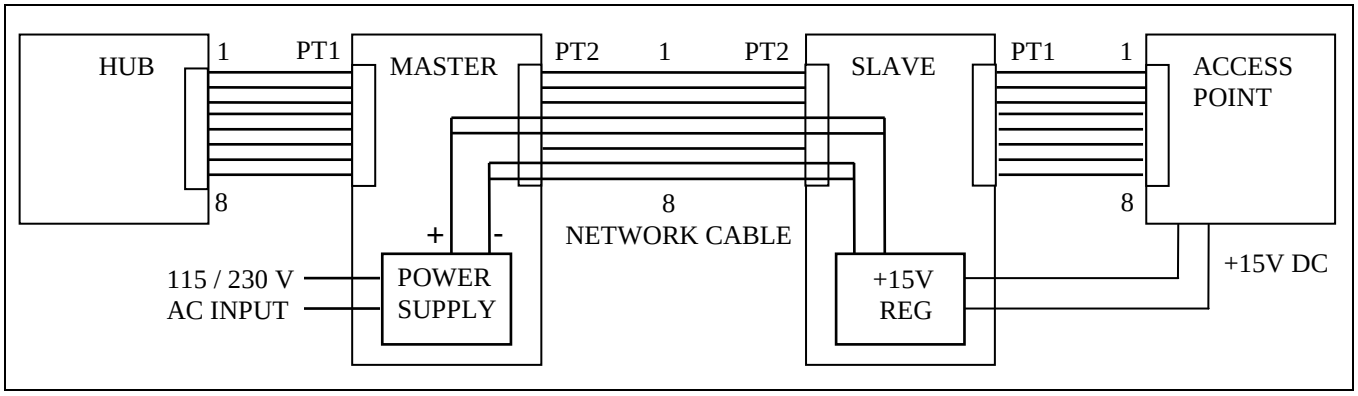

Warning: - It is important to be sure that wiring is correct before powering up. Wrong wiring may blow the output fuse in the Master or damage the AP110 or Hub. Contact SMET Ltd for details of the 'CONNECT TEST', a simple network cable tester with visual indication of open and short circuit, sequence, and rotation from pin 1.

Made in the UK. We reserve the right to change the specification. Documrnt 3895-993/6